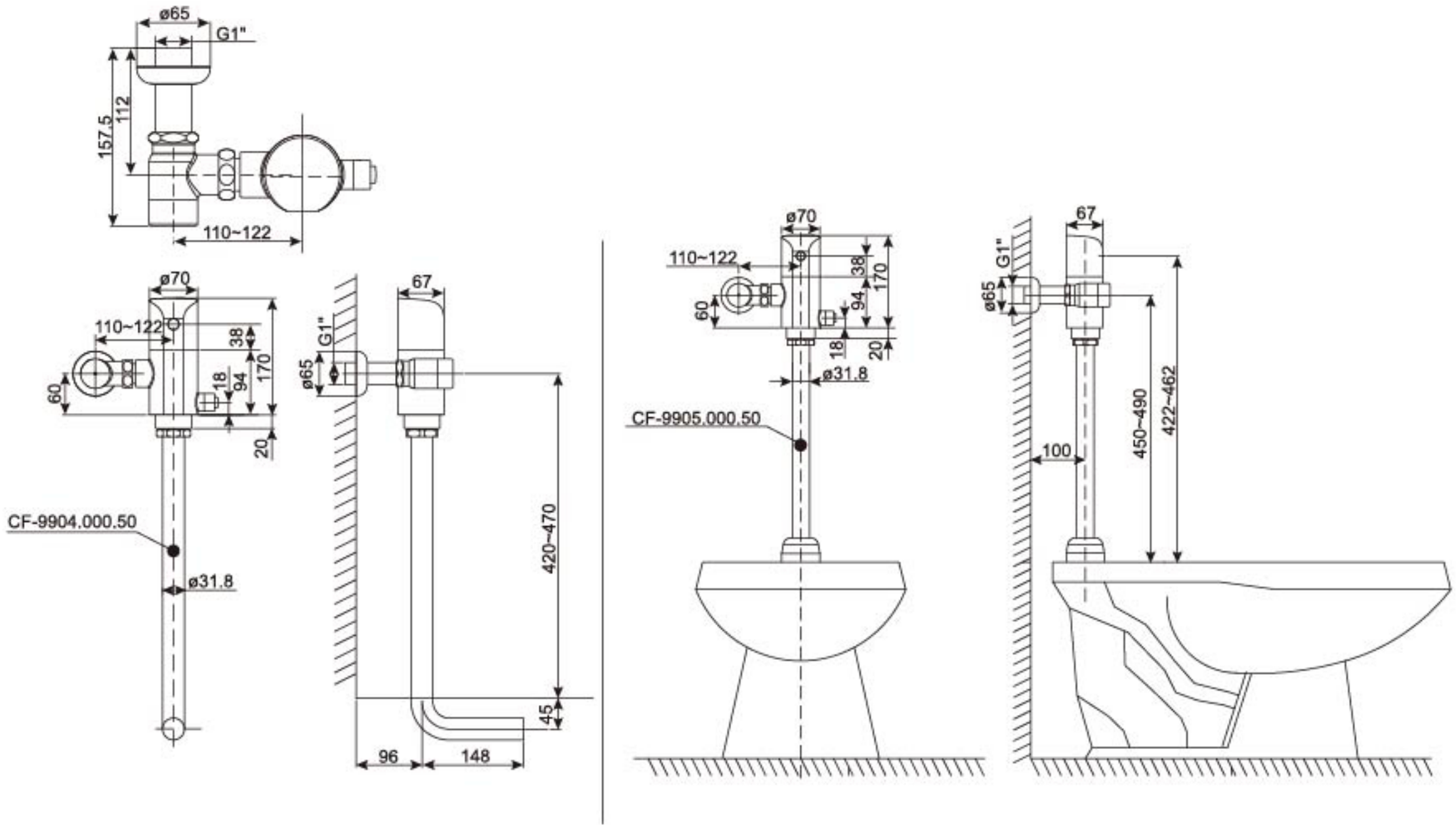
ø65
G1"
157.5
112
110~122
ø70
110~122
38
170
60
18
94
20
CF-9904.000.50
ø31.8
67
G1"
ø65
420~470
45
96
148
ø70
110~122
38
170
60
94
18
20
ø31.8
CF-9905.000.50
67
G1"
ø65
100
450~490
422~462